BICD 100 **S. Brody, ext 4-2619**
Spring 2010 **AP&M Prime 4802**

Lectures: MWF 9-9:50 AM Warren Lecture Hall 2001 Office Hours: Mon. & Fri 1:30p-2:30p or by appointment

BICD 100 — GENETICS

DATE	LECTURE TOPIC	TEXT*(Chapter) 5rd edition
3/29	1. Genetic principles — phenotype, genotype, pedigrees	1, 3
3/31	2. Genetic principles — segregation of alleles	1, 3
4/2	3. Genetic principles — meiosis and mitosis	2
4/5	4. Genetic principles — independent assortment, probability	3
4/7	5. Genetic principles — nonindependent assortment — linkage	7
4/9	6. Genetic principles — genetic maps	7
4/12	7. Genetic principles — fine structure genetic maps	14, 8
4/14	8. Genetic principles — gene-enzyme relationships	14
4/16	9. Genetic principles — gene interactions	4
4/19	10. Genetic principles — cytoplasmic inheritance	16
4/21	***Midterm Exam (Lectures 1-10):* Wednesday (In Class)**	
4/23	11. The genetics of organisms — population genetics	24. 25
4/26	12. The genetics of organisms — population genetics, consanguinity	24. 25
4/28	13. The genetics of organisms — quantitative inheritance, twins	23
4/30	14. Chromosomes — structure	5, 9
5/3	15. Chromosomes — aneuploidy	6
5/5	16. Chromosomes — aberrations	6
5/7	17. Chromosomes — sex determination	5
5/10	18. Chromosomes — sex linkage	5
5/12	19. Chromosomes — polyploidy	6
5/14	20. Chromosomes — inactive X	5
5/17	21. Chromosomes — mutation/radiation/cancer	13
5/19	***Midterm Exam (Lectures 11-21):* Wednesday (In Class)**	
5/21	22. The genetics of cells — bacterial mating	8
5/24	23. The genetics of cells — bacterial transduction	8
5/26	24. The genetics of cells — bacterial episomal transfer	8
5/28	25. The genetics of cells — recombinant DNA	15
5/31	Holiday – Memorial Day	
6/2	26. The genetics of cells — somatic cell culture studies	7
6/4	27. Review and Summary	
6/9	***Final Exam: Wed 8AM – 11 AM Room TBA***	

***Required textbook:** Snustad, Simmons, "Principles of Genetics" 5th Edition.

Recommended supplement: Stansfield, "Problems of Genetics" Any edition (Schaum's outline series).

HOMEWORK SCHEDULE

Homework sheets will be passed out at the end of the lectures listed below. Extra copies of the homework assignments and extra copies of class handouts are available from TA(s), Dr. Brody, and the box in the hall next to Rm. 1212, Muir Biology (M2B) Building.

HOMEWORK SET #	HANDED OUT	DUE IN	DISCUSSED IN DISCUSSION SECTIONS
1 (in this packet)	3/29 (Mon)	4/2 (Fri)	Week of 4/5
2	4/2 (Fri)	4/9 (Fri)	Week of 4/12
3	4/9 (Fri)	4/16 (Fri)	Week of 4/19

First midterm exam handed back and discussed in recitation the week of 4/26.

4	4/23 (Fri)	4/30 (Fri)	Week of 5/3
5	4/30 (Fri)	5/7 (Fri)	Week of 5/10
6	5/7 (Fri)	5/14 (Fri)	Week of 5/17

Second midterm exam handed back and discussed in recitation the week of 5/24

7	5/21 (Fri)	5/28 (Fri)	Week of 5/31

Homework assignments are due at 9:00 AM on Fridays. Place your homework in the proper numbered section on the floor in the front of the lecture hall. Place your section number, day and TA's name on your homework. Write those in ink or type them in. Please staple the sheets together yourself. Dr. Brody does not carry a stapler with him usually. **SAVE YOUR GRADED HOMEWORK IN CASE THERE IS A DISCREPANCY WITH YOUR TA AT THE END OF THE QUARTER.** Handing in Xerox copies of homework is not OK, and handing in homework late will get a penalty (see below). Graded homework sets will be given back in your section and after that time will be available from the TA. If a homework set of yours is not in the section you expected, then turn in a piece of paper with your name, section number, and homework set number to the instructor, and we'll look for it. Your graded exams will also be available from your TA.

Sickness or Other Unplanned Problems

If you cannot hand in a homework set on time, you must get approval to hand it in late **BEFORE** it is due, not after. Call Dr. Brody at 534-2619 (even when it is not office hours) to arrange this. Make sure you speak to Dr. Brody and not just whoever happens to answer the phone. Leaving notes and messages is not quite the same as getting approval. The TA(s) will not accept late homework sets or be involved with the arrangements. It is your responsibility to hand in the homework set on time, i.e. leaving it at home and then handing it in on Monday, is **NOT** an acceptable option. Having a midterm or homework due at the same time in another class is **NOT** an unplanned problem. Mailing it to a TA is **NOT** an acceptable option.

On Reserve

1) In the Biomed Library, we will place the both editions of the textbook, additional textbooks, and the "Problems" book. In addition, the answer book for the textbook is now on reserve.
2) Copies of old exams (plus the answers) will be available as part of this packet.

Drops and Withdraws

In accordance with current university policy.

Incompletes

Only for medical emergencies, not for personal reasons. Requests must be made prior to the final exam, **NOT** after. Requests must be made in writing: a passing grade in the course up to that point is also a campus requirement for an "I". There are no makeup Final Exams

Posting of Keys to Homework Sets and Exams

Keys to exams and problem sets will be posted Monday following due dates in the glass case at the north end of Muir Biology (M2B) Building, first floor. They will be left in place for about 3 weeks and will not be reposted. They will also be available through Soft Reserves.

Genetics Clinic (Open hours — drop in anytime, Muir Biology building, room 1103)

The clinic employs a Socratic dialogue to assist you in identifying and correcting misconceptions or gaps in knowledge which interfere with problem solving. The Clinic is also a place to become acquainted with others with whom to cooperate. Clinic hours are: Wed. 5:00p-8:00p, and Thurs. 7-10p. The TAs will be on hand to assist you. Please do not expect to have your problem sets solved for you. Drop in at anytime (open house).

Discussion (Disc.) Sections

Will consist of prepared remarks and open question periods at the discretion of your TA. You may join any section so long as the TA for that section adds you to the roster. It is then your responsibility to see that all problem sets are turned in to the section in which you are enrolled so that they will all be recorded in one place. If you change sections, please obtain a signed list of problem set scores from your old TA and deliver it to your new TA . You do not need to bother with add/drops when you change sections.

Errors in Grading

We will make errors in grading homework and exams. For homework sets, please obtain adjustments from your TA within approximately one week of the day of return. For exams, adjustments from the instructor during the week after the exam. All requests must be in writing. Do not expect or attempt to discuss regrades with the instructor, just write on the front of the exam or on a piece of paper the questions to be looked at. This avoids a lot of the potential adversary relationships that grading seems to bring out. Thanks in advance. The exams to be regraded will be collected and then will be regraded all at one time, for the sake of consistency. They will be handed back after a lecture, or available from the instructor. Don't be bashful or worried, only the parts you want regraded will be looked at, not the entire exam. Please keep your old exams until after the final, in case we have recorded them incorrectly. Please do not abuse this process, use it only for clear errors on our part, not for pleas of interpretation (i.e., you think it should be 5 pts out of 10 for partial credit, not 3 pts out of 10), nor for additional material that you are now adding to clarify your answer.

PLEASE DO NOT SUBMIT PARAGRAPHS OF INFORMATION EXPLAINING YOUR WORK. WE CAN ONLY GRADE WHAT IS IN THE BLUE BOOK.

Grading

1,000	points course total — broken down as follows:
400	200 points for each of the 2 midterms
400	points — final exam
200	points — combined total of the 7 homework sets

There is no method for doing "extra credit" to compensate for a not-so-good score. Sorry.

Overall course totals are graded on a curve at the end of the quarter. NO PLUSES OR MINUSES ARE

GIVEN. LETTER GRADES ARE NOT ASSIGNED TO ANY INDIVIDUAL EXAMS, ONLY AT THE END OF THE QUARTER. Exams are mostly problem solving, and will be based on material from lectures and text. Occasionally, problems are taken for the exam directly from one of the textbooks. LAST YEAR'S MIDTERMS AND FINAL ARE PART OF THIS PACKET, as is the grading curve. The answers to this year's exam will be posted in the glass case at the North end of the Muir Biology (M2B) Building, 1st floor shortly after the exam. These exams and answers will also be available via the Assoc. Student Soft Reserves.

Exams

Bring a blue book (any size), but no calculators. There will be review sessions by the TA(s), and it will be announced a day or two in advance. Your graded exams will be available from your TA(s). Please do not schedule something for the same time as the final (airplane ticket, etc.) as early exams are not possible. We don't always get the Final prepared and printed early enough to do this.

Academic Dishonesty (from UCSD Catalogue)

The standard of academic conduct for UCSD students requires that no student shall engage in <u>any</u> activity that involves attempting to receive a grade by means other than their own honest effort, for example, no student shall:

a. knowingly procure, provide or accept any unauthorized materials that contain questions or answer to any examination or assignment to be given at a subsequent time;

b. complete, in part or in total, any examination or assignment for another person;

c. knowingly allow any examination or assignment to be completed, in part or in total, for himself or herself by another person;

d. plagiarize or copy the work of another person and submit it as his or her own work;

e. employ aids excluded by the instructor in undertaking coursework;

f. without proper permission, alter graded class assignments or examinations and then resubmit them for regrading.

What is the UCSD Policy on Integrity of Scholarship?

> *"The principle of honesty must be upheld if the integrity of scholarship is to be maintained by an academic community. The University expects that both faculty and students will honor this principle and in so doing protect the validity of University grading. This means that all academic work will be done by the student to whom it is assigned, without unauthorized aid of any kind. Officers of instruction, hereinafter called instructors, for their part, will exercise care in planning and supervising academic work, so that honest effort will be encouraged."*

Office Hours

The instructor has office hours from 1:30p – 2:30p every Monday & Friday, unless otherwise announced. You can come by at other times if you make an appointment. The TA(s) will have office hours (TBA) and are also available at other times. Please use our services. We are glad to answer questions and to work out problems from the texts with you, but not to verify that you have the correct answers on the homework sets (before you hand them in).

Old Homework Sets (2008)

This packet contains the previous year's homework sets and the answer keys for them. Students find that it is better to try to do them on your own first. THEN, look at the answers, not vice versa.

COURSE SECTIONS

Course Type	Section	Day	Hours	Room	T.A.
DISC	A01	Monday	12:00p - 12:50p	HSS 2321	Rishabh
DISC	A02	Monday	1:00p - 1:50p	HSS 2321	Karthika
DISC	A03	Monday	2:00p - 2:50p	HSS 2321	Karthika
DISC	A04	Monday	3:00p - 3:50p	HSS 2321	Emily
DISC	A05	Tuesday	4:00p - 4:50p	WLH 2208	Beth
DISC	A06	Tuesday	5:00p - 5:50p	WLH 2208	Emily
DISC	A07	Tuesday	6:00p - 6:50p	WLH 2208	Shruti
DISC	A08	Wednesday	5:00p - 5:50p	CENTR 203	Vincent
DISC	A09	Wednesday	6:00p - 6:50p	CENTR 203	Emy
DISC	A10	Wednesday	7:00p - 7:50p	CENTR 203	Jonathan
DISC	A11	Wednesday	8:00p - 8:50p	CENTR 203	Emy
DISC	A12	Thursday	08:00a - 08:50a	WLH 2001	Sophia
DISC	A13	Thursday	09:00a - 09:50a	WLH 2001	Sophia
Clinics					
		Wednesday	5:00p – 8:00p	Muir Biology 1103	5:00 – 6:30 ~ KB, EW
					6:30 – 8:00 ~ SG, RD
		Thursday	7:00p -10:00p	Muir Biology 1103	7:00 – 8:30 ~ BG, VC, SP
					8:30 – 10:00 ~ JC, ED

TA(s):

Emily Witham	ewitham@ucsd.edu
Emy Daniels	efdaniel@ucsd.edu
Karthika Balasubramanian	kbalasub@ucsd.edu
Sophia Georghiou	sgeorghi@ucsd.edu
Jonathan Cheng	jhc032@ucsd.edu
Patricia (Beth) Griffiths	p1griffi@ucsd.edu
Shruti Patel	srp004@ucsd.edu
Rishabh Date	rdate@ucsd.edu
Vincent Chang	vkchang@ucsd.edu

Figure 3.1. **(a)** The family with bracydactyly first reported by Farabee in 1903; brought up-to-date in 1962; and **(b)** Brachydactylous hands.

(b)

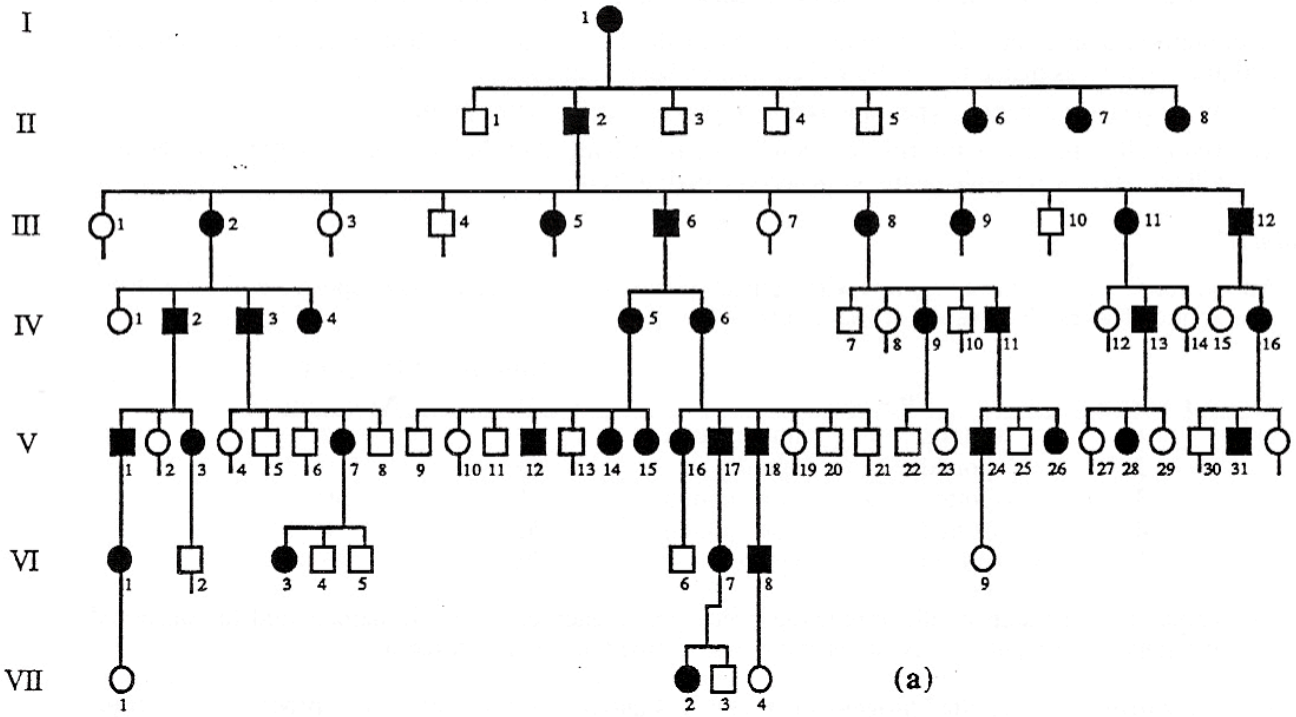

From: Suzuki, 1st Ed.

We derived the 1:4:6:4:1 ratio for wheat seed color the hard way, but declined to derive the 1:6:15:20:15:6:1 ratio for triplicate genes. The fact is that there is an easy way to figure out such ratios, using *binomial* mathematics; it is a very useful set of mathematics for geneticists to know about because of its applicability to continuous distributions and because it will lead conventiently into a discussion of the χ^2 (chi-square) test, a statistical test widely used by geneticists.

Let's examine the triplicate-gene case. An *Aa Bb Cc* plant will produce $2^3 = 8$ gamete types equally frequently. By now you ought to be able to figure out (the long way) what these classes are (the first is *A B C*, ..., the last is *a b c*). However, it is instructive to write them in a form that indicates whether a gamete carries the dominant (D) or recessive (r) alleles of each gene pair shown in Table 3-3. The frequency of gametes with 3D is 1/8, with 2D is 3/8, with 1D is also 3/8, and with 0D is 1/8.

Table 3-3

	Locus		
Frequency	***A/a***	***B/b***	***C/c***
1/8	D	D	D
1/8	D	D	r
1/8	D	r	D
1/8	r	D	D
1/8	D	r	r
1/8	r	D	r
1/8	r	r	D
1/8	r	r	r

Without knowing it, what we have done here is to expand (or multiply out) a binomial expression. A binomial expression is a mathematical description of the process of sampling if there are only *two* alternative choices to be made. The expansion tells us the frequency (probability) of each kind of sample of a specific size. In general terms, we have expanded $(a + b)^n$ where

$a = p$ (dominant allele at one locus) = 1/2
$b = p$ (recessive allele at one locus) = 1/2
n = number of gene pairs = 3

$$(a + b)^3 = 1a^3 + 3a^2b + 3ab^2 + 1b^3$$

The first term in this expansion gives us the probability of a gamate having 3D = 1 × 1/2 × 1/2 × 1/2 = 1/8. The second term gives us the probability of 2D = 3 × 1/2 × 1/2 × 1/2 = 3/8, and so on. This obviously will give us the 1/8:3/8:3/8:1/8 ratio that we derived previously. Because $(a + b)$ always equals 1, all binomial expression regardless of the value of n, also add up to 1. (It should be emphasized here that the name of each allelic class — 1D, 2D, or 3D — indicates the number of dominants from any combination of the three genes.)

n							
1	1	1					
2	1	2	1				
3	1	3	3	1			
4	1	4	6	4	1		
5	1	5	10	10	5	1	
6	1	6	15	20	15	6	1

FIGURE 3-9

There are two convenient ways of expanding binomial expressions that bipass the laborious algebra involved when the number of genes becomes very large. The first of these is the Pascal Triangle (Figure 3-9), which gives us the number proceeding each term in the expansion. (You can derive the rest yourself by observing that any number in the triangle is the sum of the two immediately above it on the right and the left.) If $n = 3$, we obtain the familiar 1:3:3:1 ratio, which we could have read off directly, and we would have known that these numbers go in front of a^3, a^2b, ab^2 and b^3, respectively, because this is always the form of every binomial expression.

The second way is to use the binomial formula that states that in n binomial "trials," the probability of one event occurring s times and the other event occurring t times is:

$$\frac{n!}{s!t!} \times a^s b^t$$

where $s + t = n$, and

$a = p$(one event)
$b = p$(the other event)
$(a + b) = 1$

The expression $n!$ means $n \times (n - 1) \times (n - 2) \cdots \times 1$; for example, $3! = 3 \times 2 \times 1 = 6$. In our example, $a = 1/2$, $b = 1/2$, $n = 3$. Let's give s a value of 2 and t a vlaue of 1, and use the formula to give us the term in the expansion corresponding to 2D:

$$\frac{3 \times 2 \times 1}{(2 \times 1) \times 1} \times \left(\frac{1}{2}\right)^2 \times \left(\frac{1}{2}\right)^1 = 3 \times \left(\frac{1}{2}\right)^3 = \frac{3}{8}$$

Now that we have expanded the triplicate-gene gametic situation in three different ways, we can return to the problem at hand, which is to use this expansion to allow us to calculate the distribution of allele doses among the *progeny* (not the gametes) in a triplicate-gene cross. It is done quite simply: the frequency distribution for either the male or the female gamete is given by $(a + b)^3$; therefore we match frequency of each type of female gamete with each type of male gamete (Figure 3-10).

Female gametes	Male gametes
	3D
	2D
3D	1D
	0D
	3D
	2D
2D	1D
	0D
	3D
	2D
1D	1D
	0D
	3D
	2D
0D	1D
	0D

FIGURE 3-10

Because both 3D:2D:1D:0D gametic distributions are described by $(a + b)^3$, the zygotic distribution is $(a + b)^3 \times (a + b)^3 = (a + b)^6$.

By simply looking at the row for which $n = 6$ in Pascal's Triangle, we find the ratio 1:6:15:20:15:6:1, the numbers that we have been trying to justify. Alternatively, we could have used the formula to calculate each term in the expansion; in this case, however, the Triangle is simpler. Notice that 1 + 6 + 15 + 20 + 15 + 6 + 1 = 64; so if, as in this case, $a = b = 1/2$, the terms in the expansion are all in sixty-fourths. Of course, a is not always equal to b, and then the calculations are harder.

Another example of the use of the binomial distribution is seen in the following calculation. What proportion of families of five children will have three boys and two girs (3B + 2G)? The order of birth doesn't matter: for example, BBBGG and BGBGB are equivalent in terms of the 3B:2G sex ratio. The binomial situation is where

$$p(\mathrm{B}) = 1/2 = a$$
$$p(\mathrm{G}) = 1/2 = b$$
$$n = 5$$

We want the value that goes in front of the term a^3b^2, and the row for which $n = 5$ in Pascal's Triangle tells us that this is 10; $10a^3b^2 = 10 \times (1/2)^5 = 10/32$. So 10/32 of such families will have the 3:2 ratio of boys to girls.

The genetics of plum plants serves as the following example where the wild type has white flowers, elongated fruit and dry fruit (these are Russian plum plants). All three of these traits are dominant to their respective recessive condition: purple flowers, round fruit, and juicy fruit. Let: p = purple; r = round; j = juicy and the (+) alleles of each gene giving the wild-type phenotype. Crosses are made to determine the gene order and linkage,

Parental Genotype	**(Wild-type)**		**(purple, round, juicy)**
	±___±___±		p___r___j
		(×)	
	±___±___±		p___r___j
F_1	±___±___±		
	p___r____j		

The F_1 was testcrossed to purple, round, juicy and the following data obtained:

Class #	**F_2 phenotypes**	**Numbers**	**Genotype of F_1 gamete**
1	white, elongated, dry	92	
2	purple, round, juicy	92	
3	purple, elongated, dry	33	
4	white, round, juicy	33	
5	purple, elongated, juicy	22	
6	white, round, dry	22	
7	white, elongated, juicy	3	
8	purple, round, dry	3	
		Total = 300	

Bring this sheet to class for Lecture #6, and we will analyze this data for gene order and linkage.

SEX TABLE

CHROMOSOMES	XO	XXX	XXY	XYY
Number of chromosomes	45	47	47	47
Clinical name	Turner's		Klinefelter's	
Sex	Female	Female	Male	Male
Estimated frequency at birth	0.5/10,000	5/10,000	7/10,000	6/10,000
Due to non-disjunction in female				
1st division	✓	✓	✓	–
2nd division	✓	✓	✓	–
Due to non-disjunction in male				
1st division	✓	–	✓	–
2nd division	✓	✓	–	✓
Effect of maternal age	–	✓	✓	–
Sex traits	degenerate ovaries	normal	no germ cells	normal
Somatic phenotype	short, webbed neck	normal	tall	taller
Mentality	normal ?	reduced	reduced	inadequate ?

The following pages are a previous years homework sets and exams, followed by the answer keys. Also enclosed is last year's grading curve for the course.

HOMEWORK SET # 1 for this year is also included (last page).